APPENDIX I: USER SPECIFICATION FORM

1. SHACKLES

1.1 The normative references shall be as follows:

ISO 148-1: Metallic materials — Charpy pendulum impact test — Part 1: Test method

a) ISO 261: ISO general purpose metric screw threads — General plan
b) ISO 263: ISO inch screw threads — General plan and selection for screws, bolts and nuts — Diameter range 0.06 to 6 inches
c) ISO 3452-1, Non-destructive testing — Penetrant testing — Part 1: General principles
d) ISO 9934-1, Non-destructive testing — Magnetic particle testing — Part 1: General principles
e) ISO 7500-1, Metallic materials — Calibration and verification of static uniaxial testing machines — Part 1: Tension/compression testing machines — Calibration and verification of the force-measuring system
f) EN 10228-1, Non-destructive testing of steel forgings - Part 1: Magnetic particle inspection
g) EN 10228-2, Non-destructive testing of steel forgings - Part 2: Penetrant testing

1.2 The shackle shall be suitable for loading or lifting devices applications.

1.3 The shackle shall be of bolt-type D-shackle or bolt-type bow shackle.

1.4 The shackle shall be hot-dip galvanized.

1.5 The Working Load Limits shall be permanently marked on every shackle.

1.6 Figure 1 illustrates the general design and construction of the D-Shackle.

Issued by: Transmission Engineer	**Authorized by:** Head of Section, Transmission NM
Signed:	**Signed:**
Date: 14/11/2023	**Date:** 14/11/2023

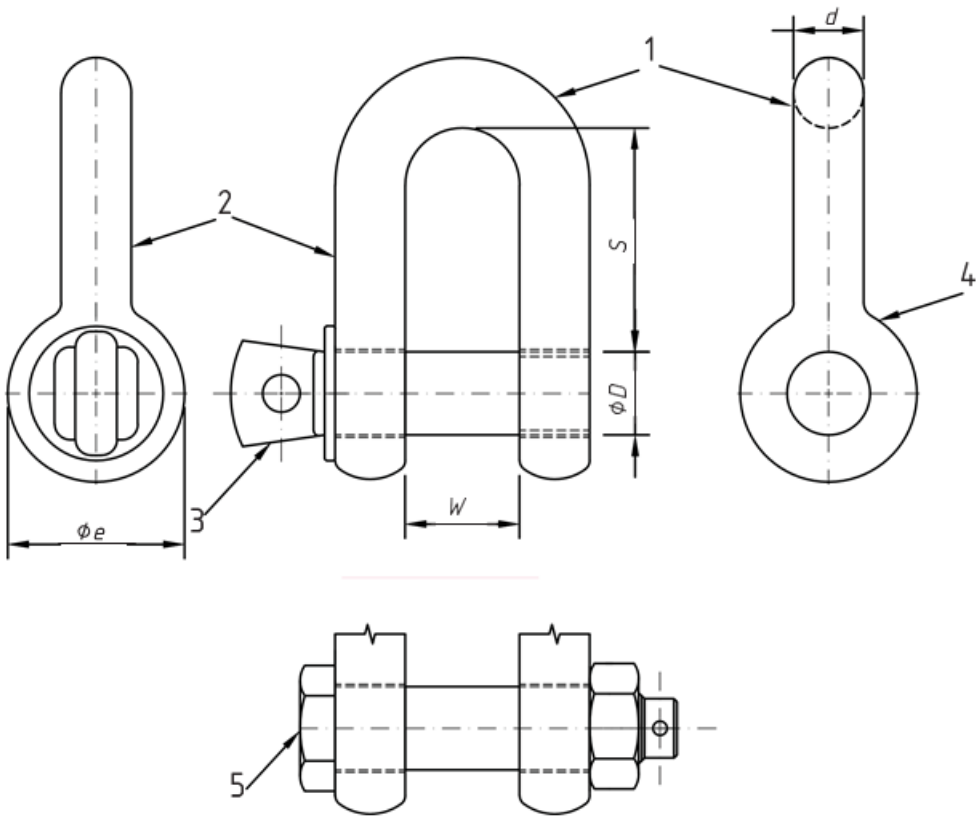

Figure 1: Bolt-type D-shackle

Issued by: Transmission Engineer	**Authorized by:** Head of Section, Transmission NM
Signed:	**Signed:**
Date: 14/11/2023	**Date:** 14/11/2023

1.7 Figure 2 illustrates the general design and construction of the bow Shackle.

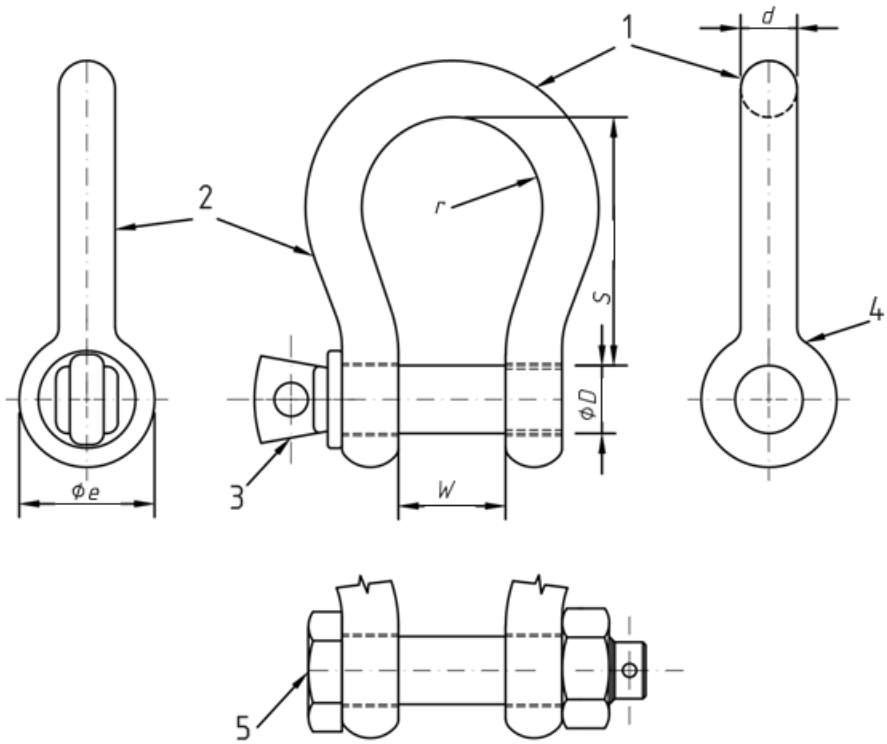

Figure 2: Bolt-type bow shackle

KEY

1 crown

2 body

3 screwed pin with eye and collar — Type W

4 eye

5 bolt-type pin with hexagon head, hexagon nut and split cotter pin — Type X

1.8 The dimensions of the bow and D-shackles shall be as illustrated in table 1.

Issued by: Transmission Engineer	**Authorized by:** Head of Section, Transmission NM
Signed:	**Signed:**
Date: 14/11/2023	**Date:** 14/11/2023

Table 1: Shackle dimensions

Working load limit (WLL) [t]			d			D			W			e			S		2r
Grade 6	**Grade 8**	**Grade 10**	min.	typ.	max.	min.	typ.	max.	min.	typ.	max.	min.	typ.	max.	min.	typ.	min.
0,5	0,75		5,5	7	8	7	8	9	9,5	12	14,5	15,5	17	18,5	20	27	19
0,75	1		7	9	10	8,5	9,5	10,5	11	13,5	16	18,5	20	21,5	25	29	20
1	1,5	2	9	10	11,5	10	11	12	14	16,5	19	22	23,5	25	27	32	24
1,5	2	2,5	10,2	11	12,7	11,2	12,2	13,2	16,5	19	21,5	25	26,5	28	33	39	27
2	2,5	3,3	12,5	13,5	15	15	16	17	19	21,5	24	29,5	32	34,5	38	44	30
3,25	4	5	14	16	19	17	19	21	24	27	30	38	40	43	47	57	39
4,75	6,3	7	17,5	19	22,5	20	22	24	28,5	31,5	34,5	44	46	49	52	65	48
6,5	8,5	9,5	20,5	22	25,5	23	25	27	33,5	36,5	39,5	50	52	55	65	76	55
8,5	9,5	12,5	23	25	28	26	28	30	40	43	46	56	59	62	74	88	64
9,5	12	15	26,5	28	31,5	30	32	34	43,5	46,5	49,5	64	67	70	83	101	70
12	13,5	18	30,5	32	35,5	33	35	37	47,5	51,5	55,5	70	73	76	87	108	78
13,5	17	21	33,5	35	39,5	36	38	40	53	57	61	76	80	84	104	126	85
17	25	30	36,5	38	42,5	40	42	44	56	60	64	84	88	92	115	139	94
25	35	40	43	45	49	49	51	53	70	74	78	100	104	108	139	168	119
35	42,5	50	48	50	52	56	58	60	79	83	87	108	112	116	155	182	130
42,5	50	55	55	57	59	63	65	67	90	95	100	126	130	134	170	205	150
55	70	85	62	65	68	68	70	72	100	105	110	140	145	150	185	240	170
85	100	120	72	75	78	80	83	86	122	127	132	157	162	167	205	300	180
120			87	90	95	92	95	98	142	147	152	205	210	215	250	370	225

iTeh STANDARD PREVIEW
(standards.iteh.ai)
IEC 62325:2021
https://standards.iteh.ai/catalog/standards/sist/a0a0a0a0-a0a0-a0a0-a0a0-a0a0a0a0a0a0/iec-62325-2021

1.8 Holes in shackle bodies shall be aligned coaxially with each other and concentric to the outside diameter of the eyes.

1.10 The shackle pins shall be of four types as follows:

a) Type V: screwed with eye
b) Type W: screwed with eye and collar
c) Type X: bolt with hexagon head, hexagon nut and a retainer, for example a split pin
d) Type Y: countersunk and slotted head

Issued by: Transmission Engineer	**Authorized by:** Head of Section, Transmission NM
Signed:	**Signed:**
Date: 14/11/2023	**Date:** 14/11/2023

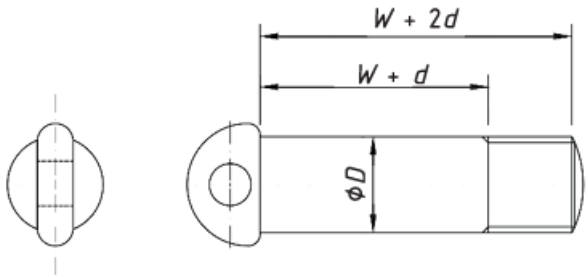

Figure 3: Type V: screwed with eye

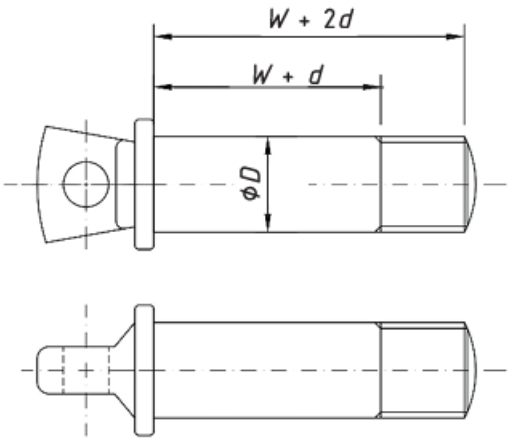

Figure 4: Type W: Screwed with eye and collar

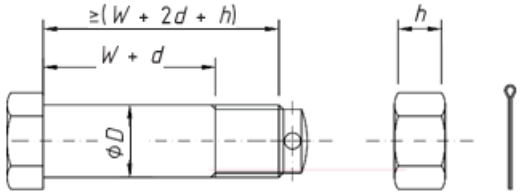

Figure 5: Type X: bolt with hexagon head, hexagon nut and a retainer, for example a split pin

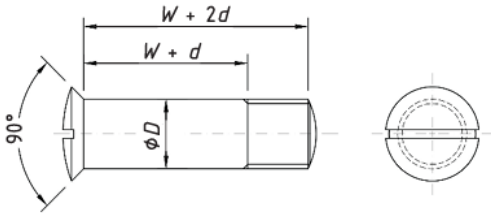

Figure 6: Type Y: countersunk and slotted head

Issued by: Transmission Engineer	**Authorized by:** Head of Section, Transmission NM
Signed:	**Signed:**
Date: 14/11/2023	**Date:** 14/11/2023

2. SPARES

Hydraulic compression machine model parameters as per Table 2:

Table 2: Hydraulic Compression Tool Parameters

Model	TESMEC PRT001
Piston Return	Hydraulic
Maximum Compression Force	640kN
Maximum Pressure	700bars
Maximum Hexagon for Steel	23.5mm
Maximum Hexagon for Aluminium	44mm
Maximum Stroke	27mm
Press Mass	26kg
Die Mass	1kg
Dimensions (base x length x height)	350 x 180 x 410mm
Hexagonal Die for Steel Conductor	PDM039
Hexagonal Die for Aluminium Conductor	PDM040

Issued by: Transmission Engineer	**Authorized by:** Head of Section, Transmission NM
Signed:	**Signed:**
Date: 14/11/2023	**Date:** 14/11/2023

GUARANTEED TECHNICAL PARTICULARS (Normative)

(To be filled and signed by the Manufacturer and submitted together with relevant copies of the Manufacturer's catalogues, brochures, drawings, technical data, sales records for previous five years, four customer reference letters, details of suppliers' capacity and experience; and copies of complete type test certificates and test reports for tender evaluation, all in English Language)

Tender No. ……

Tender Name ……

Clause No	**KPLC requirement**	**Bidder's offer** *(indicate full details)*
Manufacturer's Name and address		*Specify*
Country of Manufacture		*Specify*
Bidder's Name and address		*Specify*
1.	Shackles	*Specify compliance to all clauses*
2.	Spares	*Specify compliance to all clauses*

Issued by: Transmission Engineer	**Authorized by:** Head of Section, Transmission NM
Signed:	**Signed:**
Date: 14/11/2023	**Date:** 14/11/2023