DOCUMENT NO.: KP1/13D/4/1/TSP/09/119-2

ASSORTED TRANSMISSION LIVE LINE TOOLS — SPECIFICATION

A Document of the Kenya Power & Lighting Company Plc.

October 2023

TABLE OF CONTENTS

01. Circulation List 3
0.2 Amendment Record 4
FOREWORD 5
1. SCOPE 6
2. NORMATIVE REFERENCE 6
3. DEFINITIONS AND ABBREVIATIONS 7
4. REQUIREMENTS 7
5. TESTS AND INSPECTION 27
6. MARKING AND PACKING 28
APPENDICIES 30
A: TESTS (Normative) 30
B: QUALITY MANAGEMENT SYSTEM (Normative) 30
C: DOCUMENTATION (Normative) 30
D: GUARANTEED TECHNICAL PARTICULARS (Normative) 33

01. Circulation List

COPY NO.	COPY HOLDER
1	Manager, Transmission

REVISION OF KPLC STANDARDS

In order to keep abreast of progress in the industry, KPLC standards shall be regularly reviewed. Suggestions for improvements to approved standards, addressed to the Manager, Standards Department, are welcome.

© Kenya Power & Lighting Company Plc.

Users are reminded that by virtue of section 25 of the Copyright Act, 2001 (Revised 2014) Cap 130 of the Laws of Kenya copyright subsists in all KPLC standards and except as provided under section 26 of this act, no KPLC standard produced by KPLC may be reproduced, stored in retrieval system by any means without prior permission from the Managing Director & CEO, KPLC.

0.2 Amendment Record

Rev No.	Date (YYYY-MM-DD)	Description of Change	Prepared by (Name & Signature)	Approved by (Name & Signature)
Issue 1 Rev 0	2023-10-11	New Issue	Eng. Dedan Njoroge	Eng. George Korir

FOREWORD

This Specification has been prepared by the Transmission Department of The Kenya Power and Lighting Company Plc (herein called Kenya Power) and it lays down requirements for Assorted Transmission Live Line Tools for Airmobile (132KV & 220kV).

Assorted Transmission Live Line Tools for Airmobile are a set of tools used for live work on the 132kV & 220kV network.

This specification stipulates the minimum requirements for the Assorted Transmission Live Line Tools acceptable for use in the company and it shall be the responsibility of the suppliers and manufacturer to ensure that the offered design is of the highest quality and guarantees excellent service to KPLC, good workmanship and good engineering practice in the manufacture for KPLC.

Users of this Kenya Power specification are responsible for its correct interpretation and application.

The following are members of the team that developed this specification:

No	Name	Department
1.	Eng. Dedan Njoroge	Transmission
2.	Eng. George Korir	Transmission

1. SCOPE

This specification specifies the materials, design, size, test methods, marking and packaging of Assorted Transmission Live Line Tools.

2. NORMATIVE REFERENCE

The following standard and guidelines contain provision, which, through reference in this text, constitute provisions of this specification. For dated editions, the cited edition will apply; for undated editions, the latest edition of the referenced document shall apply.

IEC 60855-1	Live Working – Insulated Foam-Filled Tubes and Solid Rods – Part 1: Tubes and Rods of a Circular Cross-Section
IEC 61235	Live Working – Insulating Hollow Tubes for Electrical Purposes
IEC 60832-1	Live Working: Insulating Sticks and Attachable Devices: Part 1 – Insulating Sticks
IEC 60832-2	Live Working: Insulating Sticks and Attachable Devices: Part 2 – Attachable Devices
IEC 62193	Live Working: Telescopic Sticks and Telescopic Measuring Sticks
IEC 61318	Live Working – Conformity Assessment Applicable to Tools, Devices and Equipment
IEC 61243-1	Live working - Voltage detectors - Part 1: Capacitive type to be used for voltages exceeding 1 kV AC
IEC 60895	Applicable to conductive clothing, either assembled from component parts or forming a single complete clothing, worn by (electrically) skilled persons during live working (especially bare-hand working) at a nominal power system voltage up to 800 kV a.c. and ±600 kV d.c. to provide electrical continuity between all parts of the clothing and a reduction of electric field inside the clothing.

ASTM D877 - 02	Standard Test Method for Dielectric Breakdown Voltage of Insulating Liquids Using Disk Electrodes
ASTM F1826 - 00	Standard Specification for Live Line and Measuring Telescoping Tools
ASTM F711 – 02	Standard Specification for Fibre Glass Reinforced (FRP) Rod and Tube Used in Live Line

3. DEFINITIONS AND ABBREVIATIONS

For the purpose of this specification, the definitions and abbreviations given in the reference standards shall apply together with the following:

KPLC:	Kenya Power and Lighting Company Public Limited Company
AAAC	All Alloy Aluminium Conductors
ACSR	Aluminium Conductors Steel Reinforced
AWG	American Wire Gauge

4. REQUIREMENTS

4.1 Service conditions

4.1.1 The Assorted Transmission Live Line Tools for Airmobile shall be suitable for use in tropical climatic conditions including areas exposed to:

a) Altitudes of up to 2200m above sea level;

b) Humidity of up to 95% without condensing;

c) Average ambient temperature of +30ºC with a minimum of -1ºC and a maximum of +40ºC;

d) Heavy Saline conditions along the coast.

e) Designed to withstand wind speeds of up to 40m/s

4.2 Insulating Pole for Hoists & Blocks

4.2.1 The pole shall be of a diameter not less than 30mm.

4.2.2 The pole shall be made of a steel hook on one end and a swivel eye on the other end.

4.2.3 The hook shall be complete with a safety latch as illustrated in Figure 1.

4.2.4 The insulating length shall not be less than 600mm.

4.2.5 The weight shall not be greater than 4kg.

Figure 1: Insulating Pole

4.3 Hand Line Blocks with Safety Pin

4.3.1 The blocks shall be made from thermoplastic housing and sheaves and steel hooks with safety locks.

4.3.2 The hand line shall consist of two blocks (double block) as illustrated in Figure 2.

4.3.3 The shaft of the block shall have continuous rotation to provide easier coupling and alignment with the load.

4.3.4 The block shall be equipped with an eye for hot stick mounting.

4.3.5 The block shall have a dielectric strength of at least 30kV.

4.3.6 The block shall be supplied with a 15m rope.

Figure 2: Hand Line Blocks

4.4 Snatch Block

4.4.1 The body and sheave of the snatch block shall be constructed of heat treated aluminium alloy.

4.4.2 The rope hook shall be made of stainless steel.

4.4.3 The block shall have a folding device to allow the introduction of a quick swivelling service rope over the sheave.

4.4.4 The steel hooks shall be complete with a safety lock.

4.4.5 The snatch block shall be applicable for ropes up to 15mm diameter.

4.4.6 The block shall be supplied complete with a hook of a load greater than 200kg. The hook shall have two holes for attaching it at any point along the hand line.

4.4.7 Figure 3 & 4 illustrates the snatch block and the hand line hook respectively:

Figure 3: Snatch Block

Figure 4: Hand Line Hook

4.5 Ropes

4.5.1 Poly-Dacron Rope

4.5.1.1 The rope shall be a combination of three-stranded synthetic fibers.

4.5.1.2 It shall have excellent di-electric properties, high resistance to mildew, rot and chemical damage.

4.5.1.3 It can be used on capstans.

4.5.1.4 The rope shall have a diameter of at least 15mm.

4.5.1.5 The rope shall have tensile strength of at least 3000kg and handle a maximum load of at least 350kg.

4.5.1.6 The rope shall weigh not more than 5kg per 100ft.

4.5.2 Polypropylene Rope

4.5.2.1 The rope shall be light weight, strong, good di-electric strength and moisture resistant.

4.5.2.2 Water accumulation on the surface of the rope shall be removable by shaking and wiping with an absorbent cloth.

4.5.2.3 The rope shall have a diameter of at least 20mm.

4.5.2.4 The rope shall have tensile strength of at least 3200kg and handle a maximum load of at least 450kg.

4.5.2.5 The rope shall weigh not more than 5kg per 100ft.

4.5.3 Composite Fiber Braided Rope

4.5.3.1 The rope shall comprise of 12 strands.

4.5.3.2 The rope shall be made of polyester fibers plied over polyolefin fibers in each of the 12 strands.

4.5.3.3 The rope shall have a low stretch, firm and rounded.

4.5.3.4 The rope shall be applicable on capstans.

4.5.3.5 The rope shall have a diameter of at least 20mm.

4.5.3.6 The rope shall have tensile strength of at least 6500kg and handle a maximum load of at least 1200kg.

4.5.3.7 The rope shall weigh not more than 7kg per 100ft.

4.6 Suspension Insulator Lifter Tool

4.6.1 The tool shall be made from high-density polyethylene material.

4.6.2 The tool shall have a 12mm hole at the back for attaching the load line as illustrated in Figure 5.

4.6.3 The lifter tool has a rated working load greater than 150kg.

4.6.4 The tool shall not weigh more than 7kg.

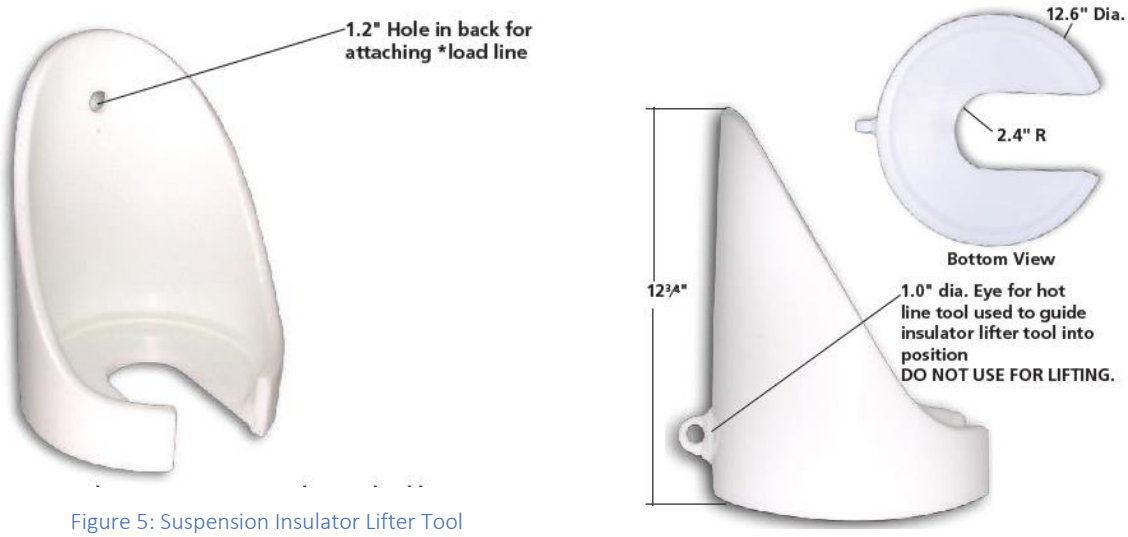

Figure 5: Suspension Insulator Lifter Tool

4.7 Universal Pole

4.7.1 The universal pole shall be made from fiberglass material for greater strength and high dielectric properties.

4.7.2 It shall consist of a toothed universal head for easy, fast, and safe coupling of all universal tools. The universal tools shall be mounted with a thumbscrew, which comes with the stick.

4.7.3 It shall be possible to couple with a universal adapter between the pole and the tool to achieve any desired angle.

4.7.4 It shall be possible to attach a rubber drip skirt to achieve additional flow distance and change the water course to prevent it from dripping down the stick.

4.7.5 It shall be accessorized by a canvas storage bag.

4.8 Trunnion Gauge

4.8.1 It shall be made from a steel.

4.8.2 The gauge shall be threaded with increased thickness of 0.5mm. When testing (i.e. checking for wear on the trunnion threads), if the trunnion allows its insertion, a thread wear of more than 0.5 mm shall be identified, thus ensuring that it is unfit for use.

4.8.3 It shall be supplied complete with a hard storage case.

4.9 Conductive Suit

4.9.1 The conductive suit shall be made of high-tech polyamide fabric lined with cotton and silver microfiber and reinforced seams or nomex aramid flame resistant fiber and microscopic stainless steel fiber with a zepel finish to repel the water.

4.9.2 The suit shall not degrade with time and/or number of washings.

4.9.3 The suit shall be specially designed for work on extra high voltage transmission lines and substations up to 800 kV AC and 600kV DC.

4.9.4 The suit shall allow the electrician to equalize his/her potential with the electric field of the energized point where the work shall be performed.

4.9.5 The suit shall meet the requirements of IEC 60895.

4.9.6 The suit shall provide electrical continuity between all parts of the clothing and a reduction of electric field inside the clothing.

4.9.7 The suit shall consist of pants, jacket, socks, gloves, boots and a storage bag as illustrated in Figure 6.

4.9.8 The suit shall comprise of three sizes: medium, large and extra-large.

4.9.9 Its anatomical construction shall allow the electrician to wear a safety helmet under the hood of the conductive suit without limiting mobility and maintaining the Faraday Cage effect around his/her head.

4.9.10 The suit shall have a grounding strap of jacket and pants tied together to prevent electrical separation of the two.

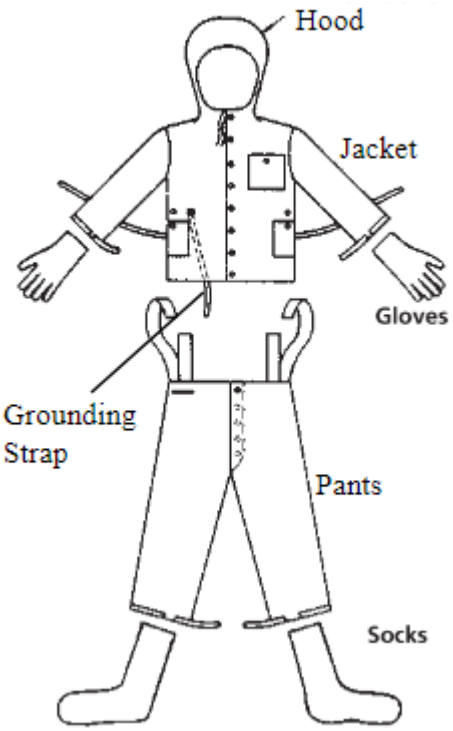

Figure 6: Conductive suit

4.9.11 The conductive boots shall facilitate electrical conductivity and the transfer of static electricity build up from the body to the ground.

4.9.12 The boot shall have a leg harness and a conductive sole.

4.9.13 The boot shall meet the ANSI specification Z41 for safety toe footwear.

4.9.14 The pair of boots shall weigh less than 3.5kg.

4.9.15 The boot shall be made from top quality, flexible, durable and water resistant leather.

4.10 Take-up Trunnions

4.10.1 They shall be made of bronze alloy and have bearings to make them light during their rotation on the strain jacks.

4.10.2 It shall be either shielded or single for coupling with yokes on the strain poles as illustrated in Figure 7.

Figure 7: Single and shielded trunnions

4.11 Measuring Telescopic Stick

4.11.1 Refer to KP1-13D-4-1-TSP-09-119 — Insulated Platform Tools for Airmobile — Specification clause 4.2 for its design and construction.

4.11.2 It shall have numerical marks every 10cm and intermediate marks every centimetre.

4.11.3 To perform a reading, the stick shall be supported on the ground in the vertical position and as the sections are handled, the operator shall have access to the reading within visual range.

4.11.4 The stick modular system shall be designed so that only the required number of sections for each service shall be used.

4.11.5 By pressing the locking buttons, the unnecessary lower sections shall be released and removed, making the telescopic stick lighter and more comfortable for tasks.

4.12 Standard Pulling Eye Tool

4.12.1 It shall provide a large offset eye to accommodate chain hoist hooks.

4.12.2 It shall leave anchor eye free with plenty of clearances for attaching formed wire grips.

4.12.3 It shall comprise of an adapter bushing that shall quickly adjust to fit 1/2", 5/8", 3/4", or 1" anchor rods.

4.12.4 It shall have a working load greater than 2,500kg and an ultimate strength greater than 8,000kg.

4.12.5 The tool shall weigh less than 3kg.

4.12.6 Figure 8 illustrates the Standard Pulling Eye Tool:

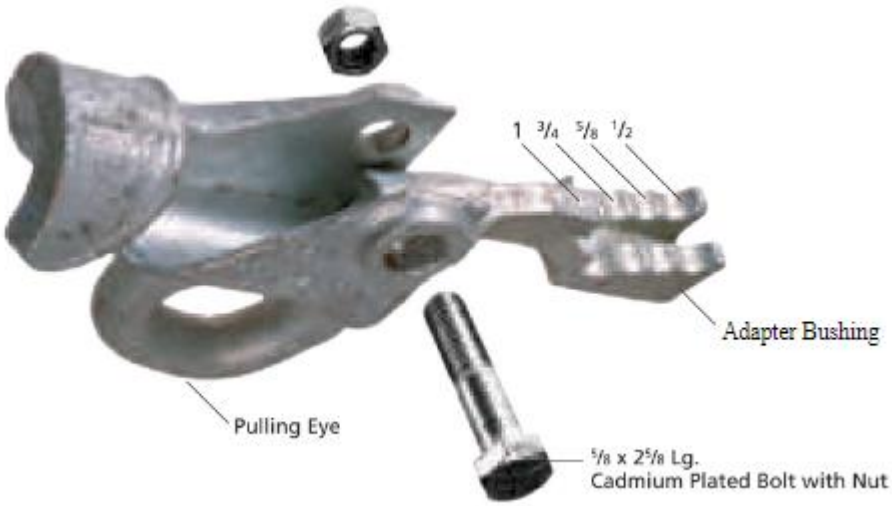

Figure 8: Standard Pulling Eye

4.13 Wire Grip Tool

4.13.1 It shall be made from heat-treated steel alloy or bronze and made to rigid specifications.

4.13.2 It shall be designed for use with hot line tools or live work.

4.13.3 When released, the grip shall lock on the line and shall not fall off.

4.13.4 The grip shall hold firmly and prevent slipping.

4.13.5 The jaws of the grip shall be double rounded and shall be applicable for use on AAAC, ACSR and copper conductors.

4.13.6 It shall be suitable for use for at least 400 AWG conductor.

4.13.7 The grip tool shall have a safe working load of at least 3,500kg.

4.13.8 The grip tool shall not weigh more than 4kg.

4.13.9 Figure 9 illustrates a Wire Grip Tool:

Figure 9: Wire Grip Tool

4.14 Fiberglass Cleaning/Maintenance Agents

4.14.1 The cleaning agents shall comprise of a moisture eater, abrasive cleaning pads, gloss restorer kit and host stick wiping clothes.

4.14.2 The fiberglass cleaning agents shall be supplied with a clear instructions manual in English language on its use.

4.14.3 The moisture eater shall remove moisture and a wide range of contaminants such as dirt, tar, grease, tree, sap, light metal rubbings and old surface coatings without harming the fiberglass material.

4.14.4 These abrasive cleaning pads shall be used in conjunction with Moisture Eater to remove contamination that clings to the tool or contamination ground into scars and scuffs in the tools surface.

4.14.5 The abrasive cleaning pads shall be used on metal parts to remove oxides and surface corrosion.

4.14.6 The gloss restorer kit consists of two agents that shall mixed two form a clear and tough coating. This coating shall replace the original gloss and protect against contamination and moisture.

NB: Gloss restorer shall be applied after using these pads since cleaning with Moisture Eater will remove the glossy finish on the tool as well as contamination.

4.14.7 Silicone impregnated cloths shall be used to wipe down mildly contaminated fiberglass, removing dust and dirt, and depositing a thin protective film on the surface of the tool.

4.15 Insulated Extension Ladder

4.15.1 The extension ladder shall be made of fiberglass tubes and is designed for live work at voltages up to 500kV.

4.15.2 The ladders shall be fitted with a rubber-coated nylon strap and fixed rubber shoes.

4.15.3 The ladders shall be supplied complete with transport and storage bags.

4.15.4 The extension ladders shall be braced through its eye with bolts mounted at the top of the base element.

4.15.5 The bending tests shall be performed with a maximum length of 8.5m.

4.15.6 The ladder shall have a retracted length of 6m and an extended length of 12m.

4.15.7 The ladder shall not weigh more than 60kg.

4.15.8 The distance between the rungs shall be 300mm and the distance between the side rails shall range between 290 – 300mm.

4.15.9 Figure 10 illustrates the Extension Ladder.

Figure 10: Extension ladder

4.16 Adjustable ladder hooks

4.16.1 The hooks shall be made of galvanized steel with a minimum diameter of 25mm and mounted on an aluminium collar clamp as illustrated in Figure 11.

4.16.2 The hooks shall have steel chains that shall consist of a safety locking device.

4.16.3 The hooks shall rotate freely allowing them to be placed in the most convenient position on the structure.

4.16.4 The hooks shall be easily affixed to the rail of the hot line or platform ladder with 51mm or 64mm diameter.

4.16.5 The hooks shall have a rated working capacity of more than 500kg per pair and shall not weigh more than 5kg.

Figure 11: Adjustable Ladder Hooks

4.17 Insulator String Tester

4.17.1 It shall be made of fiberglass tubing and housing, with quick and multangular adjustment of contact tips.

4.17.2 The insulation string tester shall be a portable device designed to quickly locate a faulty isolator in the insulator chain in hot transmission circuit.

4.17.3 The working principle of the tester shall be based on measuring the potential difference in the tested insulator disc where a high impedance galvanometer shall indicates this potential difference for comparisons with other isolator discs in the same system.

4.17.4 The tester shall have a 3-position switch on its backside to change sensitivity for a better selection of pointer range.

4.17.5 The tester shall be supplied with a calibration device designed to check the insulator tester before use, especially after a long inactive period.

4.17.6 The calibration device shall generate digital signal to the insulator to compare the values shown in the calibration display and the insulator tester galvanometer reading.

4.17.7 The set shall be supplied complete with a case and an instructional manual in English language.

4.17.8 The tester and the calibration device shall not weigh more than 1.5kg each.

4.18 Insulated Pole Tester

4.18.1 The device shall be portable, compact and easily operated by one person. It shall not weigh more than 6kg.

4.18.2 The tester shall detect leakage current caused by moisture, cracks and impurities on the insulated poles.

4.18.3 It shall be used for spot checks at field job sites or periodic diagnostics in the workshop.

4.18.4 It shall have a full scale test set-up for both wet (75kV per ft) and dry (100kV per ft).

4.18.5 The operation shall be simple with an indication of “PASS” or “FAIL” graph according to the leakage current of the tested element.

4.18.6 It shall have a zeroing knob on for setup before use to set meter to zero without the tool in the tester.

4.18.7 It shall be supplied with an instructions manual in English language.

4.19 Leakage Current Tester (Micro ammeter)

4.19.1 It shall measure leakage current of insulated structures in direct contact with the hot line.

4.19.2 The micro-ammeter shall have an alarm that will sound if the leakage current reaches a pre-set value.

4.19.3 The instrument shall automatically perform a rapid electronic self-test before use.

4.19.4 It shall be supplied complete with one coaxial cable, two jumpers, three hose clamps and an instruction manual printed in English.

4.20 Manual Chain Hoist

4.20.1 The chain hoist shall comprise of a two-way operated handle, forged steel hooks, housing, high strength alloy steel chain.

4.20.2 The working parts shall be fully enclosed in the housing unit for operator safety.

4.20.3 The hooks shall have an automatic spring-loaded latch.

4.20.4 It shall have a 360^0 swivel for unwinding the chain.

4.20.5 The hoists shall have two control levers: the first to change movement direction; the second to activate the movement safety lock.

4.20.6 The parameters of the chain hoists are as indicated in Table 1:

Table 1: Manual Chain Hoist Parameters

No	Description	Hook-to-hook minimum length	Weight
1	1.5T Manual Chain Hoist	400mm	<12kg
2	3.0T Manual Chain Hoist	500mm	<20kg
3	6.0T Manual Chain Hoist	600mm	<25kg

4.21 Sectional Hot Sticks

4.21.1 The hot sticks shall be made from fiberglass tube.

4.21.2 The hot sticks shall comprise of sectional elements which are interchangeable and attached with quick spring-action locking pins.

4.21.3 Each hot stick shall comprise of one (1pc) 38mm diameter handle section, three (3pcs) of 38mm diameter middle sections and one (1pc) of 32mm diameter top section.

4.21.4 The hot stick shall be supplied complete with a storage bag. The bag shall have reinforced edges, internal dividers for the proper storage of hot stick sections, a carrying handle, and an additional pocket for a tool head.

4.22 Tower Yoke

4.22.1 The tower yoke shall simply and quickly fit onto the structure and supports strain poles in order to relieve the mechanical stress of a suspended insulator string in conjunction with hot-end strain poles and yokes.

4.22.2 The yoke legs shall be adjustable to fit most tower structure configurations.

4.22.3 The tower yokes shall be of two types: - the H Frame Tower Yoke applicable in double planked sections as illustrated in Figure 12 and the Cross/Steel Arm Yoke applicable at pointed tips of the towers as illustrated in Figure 13.

4.22.4 A lifting eye shall be cast on top of the yoke to assist in rigging.

Figure 12: H Frame Tower Yoke

Figure 13: Cross/Steel Arm Tower Yoke

4.23 Universal Tool Heads

4.23.1 The Universal Tool Heads shall be equipped with a toothed universal head for perfect coupling with a universal pole or hot-stick operations.

4.23.2 The Universal Tool heads shall be made from heat treated aluminium or bronze alloys that have high strength properties and are resistant to corrosion.

4.23.3 The universal tool heads shall comprise of the following:

Table 2: Universal Tool Heads

NO.	HEAD	DESCRIPTION
4.23.3.1	Pin Remover	It shall be used in disc insulator decoupling to displace the cotter pin when its eye is in the opposite direction of the structure.

NO.	HEAD	DESCRIPTION
		It shall weigh less than 500g.
4.23.3.2	Ball Socket Adjuster	It shall be designed to position the insulator ball socket during installation or removal. It shall also be used as an auxiliary tool during cradle installation in “V” chains and when installing tensioner poles. It shall weigh less than 500g.
4.23.3.3	All Angle Pliers	It shall be designed to grasp from any angle, and tighten by clockwise rotation of the Universal Tool handle. The jaws shall be held firmly in position with a wing-nut. It shall weigh less than 1kg.
4.23.3.4	Ratchet Wrench	It shall be designed for the handling of bolts and nuts in energized installations through interchanging sockets. It shall be equipped with a universal rotating screw at its end. It shall be used with universal poles. It shall weigh less than 1kg.
4.23.3.5	Disconnect	It shall be designed for opening or closing fuse switches or cut-outs. It shall be made of aluminium alloy and weigh less than 500g.
4.23.3.6	Chuck Blunk	It shall be designed to allow the installation of various tools through their welded fixings,

NO.	HEAD	DESCRIPTION
		making them universal for various operations in energized installations. It shall weigh less than 500g.
4.23.3.7	Locating Pin 	It shall be used for easy introduction of pins and screws into metal structure fittings and insulator chains when the holes in these fittings need to be aligned. It shall weigh less than 500g.
4.23.3.8	Fixed Prong Tie Stick Head 	It shall be designed for safe operations while performing wire lacings, preventing the end of the wire loop from coming loose and contacting the cross-arm. It shall weigh less than 500g.
4.23.3.9	Hack Saw 	It shall be designed to cut components close to the live conductor any angle. It shall weigh less than 500g.
4.23.3.10	Pruning Saws 	It is designed to saw tree branches near energized installations. It shall weigh less than 500g.
4.23.3.11	Screw Driver 	It is designed for the installation and removal of slotted head screws in energized installations. It shall weigh less than 500g.
4.23.3.12	Mirror	It shall be designed for inspections in energized installations not directly visible.

NO.	HEAD	DESCRIPTION
		The angle of the concave mirror shall be pre-set, to give the electrician a better working position. It shall weigh less than 500g.
4.23.3.13	Shepherd Hook 	It shall be used for handling and lifting insulator chains. Its articulation shall be designed to maintain alignment with the insulator at all times. It shall also be used as a support during interventions in energized installations, such as pole or yoke installations. It shall be made from heat treated aluminium alloy. It shall weigh less than 500g.
4.23.3.14	Insulator Forks 	It shall be designed to hold the insulator during its installation or removal. With a pre-set angle on the wing nut, and by turning the screw, the fiber jaws shall be adjusted from 76 to 108mm. It shall weigh less than 1.5kg.
4.23.3.15	Rotary Prong Tie Stick Head 	It shall be designed for placing insulator ties with looped ends. It shall be made from head treated aluminium alloy body. The prong shall swivel freely, permitting a full turn on the tie wire without releasing contact so as to minimize the possibility of kinking or burning the wires. It shall weigh less than 500g.
4.23.3.16	Pointed Disconnect	It shall be made from aluminium alloy. It shall be designed for circuit breaker switch operation.

NO.	HEAD	DESCRIPTION
		It shall weigh less than 500g.
4.23.3.17	Conductor Gauge	It shall be designed for fast and accurate gauge measurement of ACSR, solid or multi-stranded copper conductors. It shall weigh less than 500g.
4.23.3.18	Spiral Disconnect	It shall be designed for opening yoke locks to release trunnions or adjustable sleeves on tensioning poles. It shall weigh less than 500g.
4.23.3.19	Universal Adapter	It shall be provided with a thumbscrew to couple to a universal head, allowing the change of the installation angle of a tool. It shall weigh less than 500g.

NO.	HEAD	DESCRIPTION
4.23.3.20	Hammer	It shall be designed to strike hard in energized installations or move pieces of hardware such as clamps. It shall weigh less than 500g.
4.23.3.21	Extension Device	It shall be designed for the extension of other universal tools in hard to reach places. It shall weigh less than 500g.
4.23.3.22	Rubber Hammer	It shall be designed to give soft strikes in brittle energized installations such as glass or porcelain discs. It shall weigh less than 500g.

4.24 Slings

4.24.1 It shall be made from polyester or nylon webbing sling.

4.24.2 The slings shall be made without any metal components so that they are easy to handle and pack due to their flexibility.

4.24.3 The slings shall be latex-treated for increased abrasion resistance.

4.24.4 The slings shall be identified with a heat imprinted sewn-on tag that includes capacities, width, style and length.

4.24.5 The slings shall have the required OSHA identification tags.

4.24.6 The slings shall be available in two basic types: - return-eye and endless model as illustrated in Figure 14 & 15 respectively.

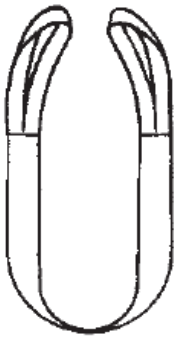

Figure 14: Return-eye Sling

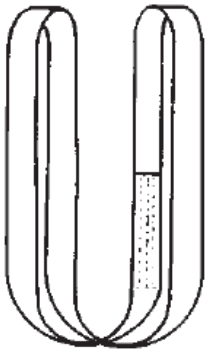

Figure 15: Endless Sling

4.24.7 The approximate parameters of the sling shall be as indicated on Table 3.

Table 3: Approximate parameters of the slings

SLING TYPE	WIDTH	LENGTH	RATED CAPACITY		
			BASKET	CHOKE	VERTICAL
Return Eye	50mm	1800mm	3200kg	1300kg	1600kg
Endless	45mm	1500mm	7800kg	3100kg	3900kg

5. TESTS AND INSPECTION

5.1. The Assorted Transmission Live Line Tools for Airmobile, accessories and fittings shall be tested in accordance with the relevant requirements and this specification. It shall be the responsibility of the manufacturer to perform or to have performed all the tests specified.

5.2. Copies of previous Test Certificates and Test Reports (for all applicable type tests) certified by the relevant International or National Testing/Standards Authority of the country of manufacture or ISO/IEC 17025 accredited testing laboratory shall be submitted with the tender (including certificate of accreditation for laboratory) for the purpose of technical evaluation, all in English language.

5.3. Copies of Test Reports to be submitted for tender evaluation shall include the results of the appropriate type tests for the Assorted Transmission Live Line Tools for Airmobile, accessories and fittings identical in all essential details with those to be supplied.

5.4. Routine and sample test reports for the Assorted Transmission Live Line Tools for Airmobile, accessories and fittings to be supplied shall be submitted to Kenya Power for approval before shipment/delivery of the goods. The Test reports shall include Verification of Dimensions, Mechanical Type Tests and Electrical Type Tests. Kenya Power shall nominate three engineers to witness acceptance tests at the factory.

5.5. On receipt of the Assorted Transmission Live Line Tools for Airmobile, accessories and fittings, Kenya Power will inspect them for acceptance at stores and may perform or have tests performed in order to verify compliance with this specification.

5.6. The supplier shall replace without charge to Kenya Power any tool, accessory or fitting which upon examination, test or use fail to meet any or all of the requirements in the specification.

6. MARKING AND PACKING

6.1. Instructions for installation and details on applicable tools shall be included in each package, all in English language.

6.2. The packaging shall protect the contents against any damage.

6.3. Every item should be marked with the following:

a) Manufacturer's Name

b) Part Number

c) Tower Type

d) Serial Number

e) Date of Manufacture

f) The words "PROPERTY OF KPLC"

6.4. In addition, each item should be marked with the applied proof test load. These markings should be permanently embossed on a nameplate in a protected location.

APPENDICIES

A: TESTS (Normative)

A.1 It shall be the responsibility of the supplier to test or to have all the relevant tests performed.

B: QUALITY MANAGEMENT SYSTEM (Normative)

B.1 The supplier shall submit a Quality Assurance Plan (QAP) that will be used to ensure that the Assorted Transmission Live Line Tools for Airmobile physical properties, tests and documentation, will fulfil the requirements stated in the contract documents, standards, specifications and regulations. The QAP shall be based on and include relevant parts to fulfil the requirements of ISO 9001: 2015.

B.2 The Manufacturer's Declaration of Conformity to applicable standards and copies of quality management certifications including copy of valid and relevant ISO 9001: 2015 certificate shall be submitted with the tender for evaluation.

B.3 The bidder shall indicate the delivery time of the Assorted Transmission Live Line Tools for Airmobile, manufacturer's monthly & annual production capacity and experience in the production of the type and size of items being offered. A detailed list & contact addresses (including e-mail) of the manufacturer's previous customers for similar type of the tools sold in the last five years as well as reference letters from at least four of the customers shall be submitted with the tender for evaluation.

C: DOCUMENTATION (Normative)

C.1 The bidder shall submit its tender complete with technical documents for tender evaluation. The technical documents to be submitted (all in English language) for tender evaluation shall include the following:

a) Fully filled clause by clause Guaranteed Technical Particulars (GTP) signed by the manufacturer, specific values shall be filled in, terms like "yes", "Agree" , "complied" shall not be acceptable;

b) Copies of the Manufacturer's catalogues, brochures, drawings and technical data;

c) Sales records for the last five years and at least four customer reference letters;

d) Details of manufacturing capacity and the manufacturer's experience;

e) Copies of required Type Test Reports by a Third Party Testing Laboratory accredited to ISO/IEC 17025;

f) Copy of Accreditation Certificate to ISO/IEC 17025 for the Third Party Testing Laboratory;

g) Manufacturers Letter of Authorization, ISO 9001:2015 Certificate and other technical documents required in the tender.

h) Manufacturer's warranty and guarantee; subject to at least 12 months from date of delivery to KPLC stores

C.2 The successful bidder (supplier) shall submit the following documents/details to KPLC for approval before manufacture:

a) Fully filled clause by clause Guaranteed Technical Particulars (GTP) stamped and signed by the manufacturer, specific values shall be filled in, terms like "yes", "Agree" , "complied" shall not be acceptable;

b) Design Drawings with details of the Assorted Transmission Live Line Tools for Airmobile to be manufactured for KPLC.

c) Quality Assurance Plan (QAP) that will be used to ensure that the design, material, workmanship, tests, service capability, maintenance and documentation will fulfill the requirements stated in the contract documents, standards, specifications and regulations. The QAP shall be based on and include relevant parts to fulfill the requirements of ISO 9001:2015.

d) Detailed test program to be used during factory testing;

e) Marking details and method to be used in marking the Assorted Transmission Live Line Tools for Airmobile;

f) Packaging details (including packaging materials).

…….THIS SPACE IS INTENTIONALLY LEFT BLANK……

D: GUARANTEED TECHNICAL PARTICULARS (Normative)

(To be filled and signed by the Manufacturer and submitted together with relevant copies of the Manufacturer's catalogues, brochures, drawings, technical data, sales records for previous five years, four customer reference letters, details of suppliers' capacity and experience; and copies of complete type test certificates and test reports for tender evaluation, all in English Language)

Tender No. ……

Clause number	KPLC requirement	Bidder's offer (indicate full details)
Manufacturer's Name and address		*Specify*
Country of Manufacture		*Specify*
Bidder's Name and address		*Specify*
1.	Scope	*Specify*
2.	References	*Specify*
4.	**Requirements**	
4.1	**Service Conditions**	
a) – e)	*KPLC requirement*	*State*
4.2	**Insulating Pole for Hoists & Blocks**	
4.2.1 - 4.2.5	*KPLC requirement*	*Specify*
4.3	**Hand Line Blocks with Safety Pin**	
4.3.1 – 4.3.6	*KPLC requirement*	*Specify*
4.4	**Snatch Block**	
4.4.1 – 4.4.7	*KPLC requirement*	*Specify*
4.5	**Ropes**	
4.5.1	**Poly-Dacron Rope**	

Clause number	KPLC requirement	Bidder's offer (indicate full details)
4.5.1.1 - 4.5.1.6	*KPLC requirement*	*Specify*
4.5.2	**Polypropylene Rope**	
4.5.2.1 - 4.5.2.5	*KPLC requirement*	*Specify*
4.5.3	**Composite Fiber Braided Rope**	
4.5.3.1 - 4.5.3.7	*KPLC requirement*	*Specify*
4.6	**Suspension Insulator Lifter Tool**	
4.6.1 – 4.6.4	*KPLC requirement*	*Specify*
4.7	**Universal Pole**	
4.7.1 – 4.7.5	*KPLC requirement*	*Specify*
4.8	**Trunnion Gauge**	
4.8.1 – 4.8.3	*KPLC requirement*	*Specify*
4.9	**Conductive Suit**	
4.9.1 – 4.9.15	*KPLC requirement*	*Specify*
4.10	**Take-up Trunnions**	
4.10.1 - 4.10.2	*KPLC requirement*	*Specify*
4.11	**Measuring Telescopic Stick**	
4.11.1 - 4.11.5	*KPLC requirement*	*Specify*
4.12	**Standard Pulling Eye Tool**	
4.12.1 - 4.12.6	*KPLC requirement*	*Specify*
4.13	**Wire Grip Tool**	
4.13.1 - 4.13.9	*KPLC requirement*	*Specify*
4.14	**Fiberglass Cleaning/Maintenance Agents**	
4.14.1 - 4.14.7	*KPLC requirement*	*Specify*

Clause number	KPLC requirement	Bidder's offer (indicate full details)
4.15	**Insulated Extension Ladder**	
4.15.1 - 4.15.9	*KPLC requirement*	*Specify*
4.16	**Adjustable ladder hooks**	
4.16.1 - 4.16.5	*KPLC requirement*	*Specify*
4.17	**Insulator String Tester**	
4.17.1 - 4.17.8	*KPLC requirement*	*Specify*
4.18	**Insulated Pole Tester**	
4.18.1 - 4.18.7	*KPLC requirement*	*Specify*
4.19	**Leakage Current Tester (Micro ammeter)**	
4.19.1 - 4.19.4	*KPLC requirement*	*Specify*
4.20	**Manual Chain Hoist**	
4.20.1 – 4.20.6	*KPLC requirement*	*Specify*
4.21	**Sectional Hot Sticks**	
4.21.1 - 4.21.4	*KPLC requirement*	*Specify*
4.22	**Tower Yoke**	
4.22.1 - 4.22.4	*KPLC requirement*	*Specify*
4.23	**Universal Tool Heads**	
4.23.1 - 4.23.3	*KPLC requirement*	*Specify*
4.24	**Slings**	
4.24.1 - 4.24.7	*KPLC requirement*	*Specify*
5	**Test Requirements**	
5.1	Test standards and responsibility of testing	*Specify*
5.2	Relevant copies of test documentation	*Specify*

Clause number	KPLC requirement	Bidder's offer (indicate full details)
5.3	Type of tests to be done on the Assorted Transmission Live Line Tools for Airmobile	*Specify*
5.4	Approval of routine and sample test reports	*Specify*
5.5	Local inspection and acceptance	*Specify*
5.6	Replacement of faulty Items	*Specify*
6	**Marking and Packing**	
6.1	Instructions for installation	*Specify*
6.2	Packaging	*Specify*
6.3	Marking details	*Specify*
6.4	Marking of applied proof test load	*Specify*
A	**Test**	
A.1	Responsibility of carrying out tests	*State*
B	**Quality Management System**	
B.1	Quality Assurance Plan	*Provide*
B.2	Manufacturer's declaration of conformity to applicable standards	*Provide*
B.3	Manufacturer's experience and delivery time	*State*
	Manufacturer's delivery time	*State*
	Manufacturing Capacity (units per month)	*State*
	List of previous customers	*State*
	Customer reference letters	*State*
C	**Documentation**	
C.1	Documents submitted with tender	*State compliance*
C.2	Documents to be submitted by supplier to KPLC for approval before manufacture	*State compliance*

Clause number	KPLC requirement	Bidder's offer (indicate full details)
	Statement of compliance to specification (indicate deviations if any & supporting documents)	*State compliance*

……..

Manufacturer's Name, Signature, Stamp and Date