TABLE OF CONTENTS

0.1 Circulation List

0.2 Amendment Record

FOREWORD

1. SCOPE
2. REFERENCES
3. TERMS AND DEFINITIONS
4. REQUIREMENTS
5. TESTS AND INSPECTION
6. MARKING, LABELLING AND PACKING

ANNEX A: **Guaranteed Technical Particulars** *(to be filled and signed by the Supplier and submitted together with copies of manufacturer's catalogues, brochures, drawings, technical data, sales records and copies of certificates and test reports for tender evaluation)*

0.1 Circulation List

COPY NO.	COPY HOLDER
1	Research & Development Manager
2	Procurement Manager
3	Stores & Stock Control Manager
4	Operations & Maintenance Manager
5	Deputy Manager, Technical Audit

0.2 Amendment Record

Rev No.	Date (YYYY-MM-DD)	Description of Change	Prepared by (Name & Signature)	Approved by (Name & Signature)

FOREWORD

This specification has been prepared by the Research and Development Department in collaboration with O&M Department both of The Kenya Power and Lighting Company Limited (KPLC) and it lays down requirements for Climbers for use on Concrete Poles. It is intended for use by KPLC in purchasing the climbers.

It shall be the responsibility of the supplier to ensure adequacy of the design, good workmanship and good engineering practice in the manufacture of the climbers for KPLC. The supplier shall submit information which confirms satisfactory service experience with products which fall within the scope of this specification.

1. SCOPE

This specification is for climbers for use by Linesmen in climbing concrete poles along power lines.

The climber shall be used together with safety belt for positioning and support of the wearer at a height when working on concrete poles.

2. REFERENCES

The following standard contains provisions which, through reference in this text constitute provisions of this specification. Unless otherwise stated, the latest editions (including amendments) apply

ISO 2081: Metallic coatings – Electroplated coatings of zinc on iron or steel

3. TERMS AND DEFINITIONS

For the purpose of this specification the definitions given in the reference standards shall apply.

4. REQUIREMENTS

4.1 SERVICE CONDITIONS

The climbers shall be suitable for continuous use outdoors in tropical areas with humidity of up to 90%, average ambient temperature of +30°C with a minimum of -1°C and a maximum of +40°C and heavy saline conditions along the coast.

4.2. DESIGN AND CONSTRUCTION

4.2.1. General Requirements

4.2.1.1 The climber shall be designed for use by linesmen required to climb concrete poles to work at heights in a supported position.
It shall be suitable for attachment to the shoes by straps to allow the wearer to work on concrete poles for prolonged period.

4.2.1.2 The climbers shall be supplied in pairs (Left and Right). Each complete pair shall weigh no more than 7kg.

4.2.1.3 The climbers shall be suitable for concrete poles of top diameters of 190mm with taper of 13mm and lengths of 10-15m.

4.2.1.4 The climbers shall be of sizes capable of being fitted on boots of sizes 8, 10 and 12.

4.2.1.5 The climbers shall be in accordance with the general arrangement drawing below:

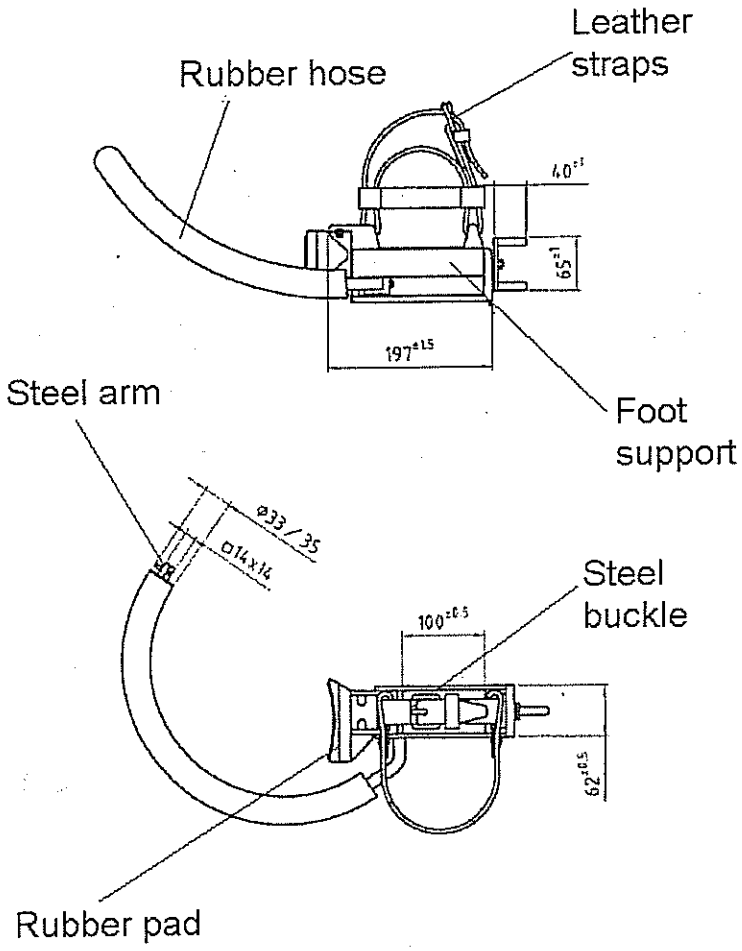

4.2.2. Materials

4.2.2.1 **Climbers foot-support** shall be made of aluminium alloy with moving parts made of steel. It shall have a steel screw with nut made of brass.

4.2.2.2 **Arms** shall be made of steel alloy destined to thermic treatments, covered by rubber hose, vulcanised and rifled on the peripheral surface for a better adherence against the pole.

4.2.2.3 **Foot strap** shall be made of leather chrome tanned.

4.2.2.4 **Adhesion pad** shall be made of vulcanised rubber, having rifled pole side for increasing the adherence.

4.2.2.5 **Buckles** shall be made of galvanized steel.

4.2.2.6 **Rivets** shall be made of steel electrolytically galvanized according to ISO 2081 Standard.

4.2.2.7 **Sewing yarns** shall be nylon twisted with several yarns.

4.2.3. Construction

The climbers shall include in the proper position the following:

4.2.3.1 Device for adjusting the pole arms opening, consisting of a small steel shaft with worm screw and relevant brass nut and square hole for clutching the arms and for the pole-adhesion rubber pad and the support strap holes, with edges properly rounded, for fixing the foot leather straps.

4.2.3.2 The clutch of the hugging arms into the climbers holes should be done by means of a suitable blocking device.

4.2.3.3 The arms, having a squared section of not less than 14 x 14 mm, should be shaped according to the diameters of poles on which they are to be used.

4.2.3.4 The rubber covering the arm, that should be easily replaceable when degraded, should be blocked against unstringing by means of a steel flat washer and safety pin.

4.2.3.5 The adhesion rubber pad shall be made in such a way that it is easy to replace.

4.2.3.6 The system used to fix the boot to the climber shall consist of a leather heel-strap and a leather boot-strap.

4.2.3.7 The leather strap sewing should be also secured by means of a round head rivet, having diameter of 5 mm, riveted after having interposed a flat washer.

4.2.3.8 The leather straps fixing the foot shall have a section not smaller than 125 mm^2 and shall allow an easy and safe blocking of the boot on the climber foot support. The securing leather straps shall have holes spaced at 25 mm between one and the other, for easier buckle adjustment.

4.2.3.9 The climbers shall not have sharp parts or edges and special care shall be addressed to the parts which are in contact with the leather of straps.

5. TESTS AND INSPECTION

5.1 The climbers shall be inspected and tested in accordance with the requirements of this specification. It shall be the responsibility of the manufacturer to perform or to have performed all relevant tests.

5.2 Copies of previous test reports by the relevant National Testing/Standards Authority of the country of manufacture (or ISO/IEC 17025 accredited independent laboratory) shall be submitted with the offer for evaluation (all in English Language).

5.3 Test reports for the climbers to be supplied shall be submitted to KPLC for approval before shipment/delivery of the goods.

6. MARKING, LABELLING AND PACKING

6.1 The following information shall be marked indelibly and legibly on the climbers.

i) Manufacturer's Name/Trademark and Type Designation;
ii) Year of Manufacture;
iii) Size;
iv) The letters "KPLC"

6.2 Instructions for storage, care and use shall be included in each package, all in English language.

6.3 Each pair shall be supplied in a moisture proof package.

.....THIS SPACE LEFT BLANK.....

ANNEX A: **Guaranteed Technical Particulars** *(to be filled and signed by the Manufacturer for all clauses and submitted for tender evaluation)*

Clause Number	Bidder's offer	Reference page on Manufacturer's catalogue, drawing, technical data or tests report to support the offer.
1		
2		
3		
4.1		
4.2.1		
4.2.2		
4.2.3		
5.1		
5.2		
5.3		
6.1		
6.2		
6.3		
Deviations if any from specifications (indicate supporting documents submitted)		

NB: - *This schedule does not in any way substitute for detailed information required elsewhere in the specification.*

.....

Supplier's Name, Signature, Stamp and Date