TABLE OF CONTENTS


0.1 Circulation List

0.2 Amendment Record

FOREWORD

1. SCOPE
2. REFERENCES
3. TERMS AND DEFINITIONS
4. REQUIREMENTS
5. TESTS AND INSPECTION
6. MARKING, LABELLING AND PACKING

**ANNEX A:** **Technical Particulars** *(to be filled and signed by the Manufacturer and submitted together with catalogues, brochures, drawings, technical data and certified true copies of test reports for tender evaluation)*

## 0.1 Circulation List

| COPY NO. | COPY HOLDER |
|---|---|
| 1 | Research & Development Manager |
| 2 | Procurement Manager |
| 3 | Stores & Transport Manager |
| 4 | Operations & Maintenance Manager |
| 5 | Design & Construction Manager |
| 6 | Assistant Manager, Technical Audit |

## 0.2 Amendment Record

| Rev No. | Date (YYYY-MM-DD) | Description of Change | Prepared by (Name & Signature) | Approved by (Name & Signature) |
|---|---|---|---|---|
| | | | | |
| | | | | |
| | | | | |
| | | | | |

## FOREWORD

This specification has been prepared by the Research and Development Department and Operations and Maintenance Department both of The Kenya Power and Lighting Company Limited (KPLC) and it lays down requirements for Fiberglass Operating Rod/Pole (Link Stick) and the associated Operating Heads. It is intended for use by KPLC in purchasing the items.

It shall be the responsibility of the manufacturer to ensure adequacy of the design and good engineering practice in the manufacture of the Fiberglass Operating Rod/Pole (Link Stick) and the associated Operating Heads for KPLC. The manufacturer shall also submit information which confirms satisfactory service experience with products which fall within the scope of this specification.

## 1. SCOPE

1.1 This specification is for fibreglass operating rod/pole and associated operating heads for use on equipment operating at voltages above 1000 volts ac 50Hz. It covers operating rods/poles for portable use.

1.2 Each fibreglass operating rod/pole shall be complete with the following operating heads:

1.2.1 Earth Clamp Operating Head (Fig. 2)
1.2.2 Expulsion Fuse Cutout and Solid Link Isolator Operating Head – TYPE 1 (Fig 3)
1.2.3 Expulsion Fuse Cutout and Solid Link Isolator Operating Head – TYPE 2 (Fig 4)

## 2. REFERENCES

BS EN 61230: Live working – Portable equipment for earthing or earthing and short-circuiting.

## 3. TERMS AND DEFINITIONS

For the purpose of this specification the definitions given in the reference standards shall apply. In this specification, the term operating rod, operating pole and link stick have the same meaning.

## 4. REQUIREMENTS

## 4.1 SERVICE CONDITIONS

4.1.1 The operating rods and operating heads shall be suitable for use in tropical conditions at altitudes of up to 2200m above sea level, temperatures of –1 °C to 40 °C, humidity of up to 95% and saline conditions along the coast.

4.1.2 The operating rods and operating heads shall be used for earthing applications and operation of expulsion fuse cutouts, solid link isolators and similar devices on overhead lines operating at voltages of up to 33kV.

## 4.2. DESIGN AND CONSTRUCTION

4.2.1. The operating rods and operating heads shall be designed and manufactured in accordance to BS EN 61230 and the requirements of this specification.

4.2.2. The operating rods shall be insulating and shall be manufactured from glass reinforced epoxy resin. The operating heads shall be in aluminium alloy casting, non-brittle in operation.

4.2.3. The operating rod shall be extensible and shall consist of 6No. interlocking sections of 1.2m x 40mm dia. each. All sections shall employ copper alloy press buttons to ensure positive jointing.

4.2.4. The assembly shall be rigid, strong, dimensionally stable, resistant to chemical action and light in weight.

4.2.5. The operating rod, its couplings and operating heads shall withstand the bending and torsion stresses produced by the load and the tightening forces. The deflection shall be minimized to avoid uncontrollable movements.

4.2.6. The operating rod assembly shall consist of:

a) Top Section suitable for operating head.
b) Intermediate Sections.
c) Bottom Section with non-slip hand grip and rubber rain shield.

4.2.7. The operating rod shall be extendable to a maximum length consisting of all the six sections or intermediate operating lengths of 2 to 4 sections.

4.2.8. The operating rod assembly shall be supplied complete with 3No. operating heads as follows:

a) Earth clamp head, suitable for temporary earthing clamps (as per Fig. 2).
b) Fuse cut out head, suitable for removal and insertion of expulsion fuse cut out and solid link isolators –TYPE 1 (as per Fig. 3).
c) Fuse cut out head, suitable for removal and insertion of expulsion fuse cut out and solid link isolators –TYPE 2 (as per Fig. 4).

**The general layout of the operating rods and operating heads shall be as shown in figure 1 attached. The operating heads shall be as detailed in fig 2, 3 and 4 attached.**

## 5. TESTS AND INSPECTION

5.1 The Operating Rods and Operating Heads shall be tested in accordance with BS EN 61230 and the requirements of this specification. It shall be the responsibility of the manufacturer to perform or to have performed all the tests specified.

5.2 Certified true copies of previous test reports by the relevant International or National Testing/ Standards Authority of the country of manufacture (or ILAC or ISO/IEC 17025 accredited laboratory) shall be submitted with the offer for evaluation (all in English Language). A copy of accreditation certificate for the laboratory shall also be submitted. Any translations of certificates and test reports into English language shall be signed and stamped by the Testing Authority.

5.3 The Operating Rods and Operating Heads shall be subject to acceptance tests at the manufactures' works before dispatch. Acceptance tests shall be witnessed by two Engineers appointed by The Kenya Power and Lighting Company Limited (KPLC).

5.4 Test reports for the Operating Rods and Operating Heads to be supplied shall be submitted to KPLC for approval before shipment/delivery of the goods.

5.5 On receipt of the Operating Rods and Operating Heads KPLC will inspect them and may perform or have performed any of the relevant tests in order to verify compliance with the specification. The manufacturer shall replace without charge to KPLC, Operating Rods and Operating Heads which upon examination, test or use fail to meet any or all of the requirements in the specification.

## 6. MARKING, LABELLING AND PACKING

6.1 Each operating rod and operating head shall be marked legibly and permanently with the following information:

a) Name or trade mark of the manufacturer

b) Type reference
c) Date of manufacture
d) Standard to which it complies
e) The letters "KPLC"

6.2 The operating rod assembly shall be supplied complete with a canvas carrying bag with shoulder straps. The bag shall have an internal pocket for keeping the operating heads.

6.3 Manufacturer's instructions for use and guidelines for maintenance and inspection shall be submitted together with the equipment during delivery, all in English language.

**---------THIS SPACE LEFT BLANK---------**

## Operating poles

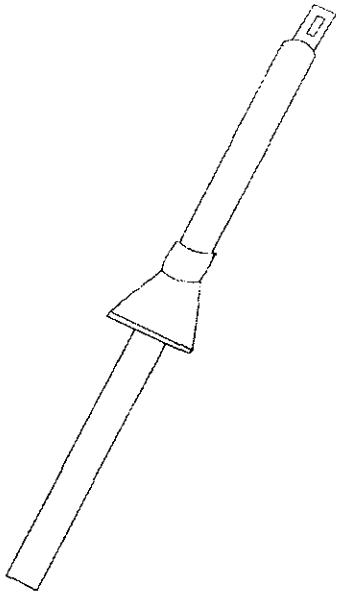

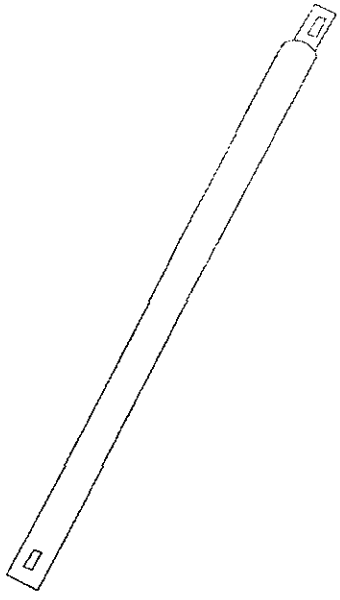

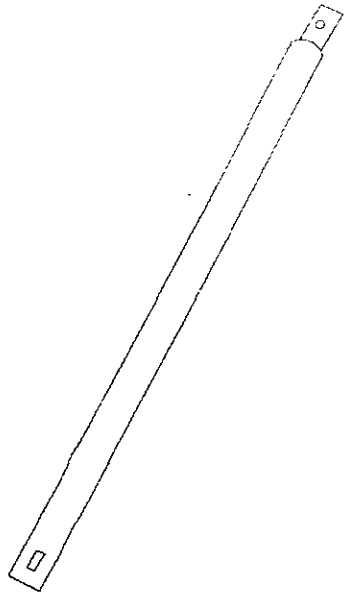

**TOP SECTION TERMINATIONS**

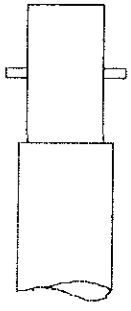

Spring clip

**POLE HEADS**

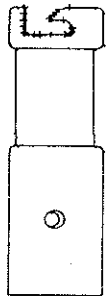


Earth clamp operating head

**POLE HEADS**

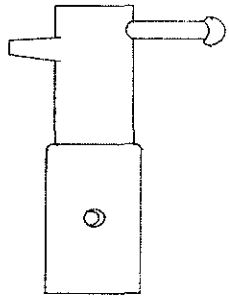

Universal fuse cutout operating head

FIG: 1 OPERATING POLES & POLE HEADS GENERAL LAYOUT

Drawn by: J.M.Kahare
Checked by: S. Kimitei
Date: 25 / 08 /2003

| Issued by: Head of Section, Tech Stds & Specs | Authorized by: Head of Department, R&D |
|---|---|
| Signed: Kimitei | Signed: |
| Date: 2008-07-03 | Date: 2008-07-03 |

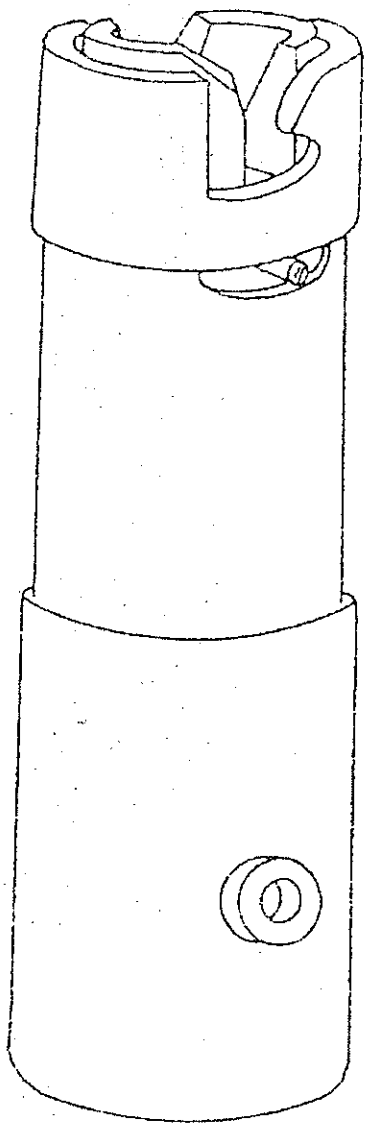

Material Aluminium alloy casting with aluminium insert

**Fig 2: Earth Clamp Operating Head** (Aluminium Alloy Casting with Aluminium insert)

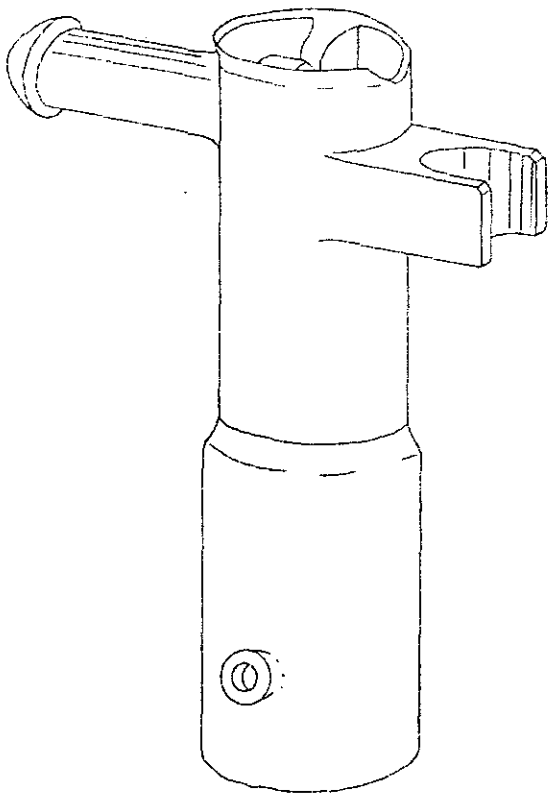

Material Aluminium alloy casting

**Fig 3: Expulsion Fuse Cutout/Solid Link Isolator Operating Head – TYPE 1**
(Aluminium Alloy Casting)

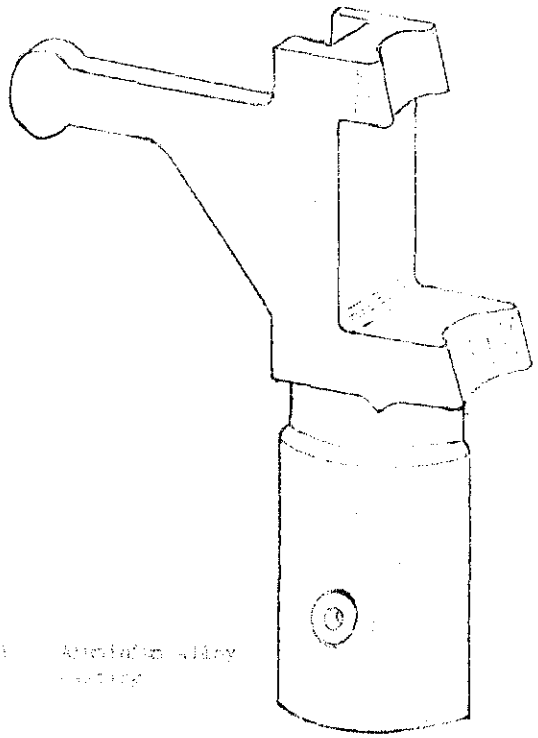

**Fig 4: Expulsion Fuse Cutout/Solid Link Isolator Operating Head – TYPE 2**
(Aluminium Alloy Casting)

**ANNEX A:** **Technical Particulars** *(to be filled and signed by the Manufacturer and submitted together with catalogues, brochures, drawings, technical data and certified true copies of previous test reports & certificates for tender evaluation)*

**TENDER NO**.....

| | Description | | Guaranteed Technical Particulars for operating rod and operating heads offered |
|---|---|---|---|
| 1 | Name of Manufacturer | | |
| | Country of Origin of operating rod and operating heads being offered | | |
| 2 | Type/Model Reference Number | | |
| 3 | Service conditions | | |
| 4 | Design standards complied with | | |
| 5 | Materials & Properties | Operating Rod | |
| | | Earth Clamp Operating Head (Fig. 2) | |
| | | Expulsion Fuse Cutout and Solid Link Isolator Operating Head – TYPE 1 (Fig 3) | |
| | | Expulsion Fuse Cutout and Solid Link Isolator Operating Head – TYPE 2 (Fig 4) | |
| 6 | Operating rod assembly, components and number of operating heads offered (indicate type) | | |
| 7 | Marking and Labelling | | |
| 8 | Packing | | |
| 9 | List test reports submitted (indicate test report numbers, date, Testing Institution and contact addresses) | | |
| 10 | Manufacturer's Guarantee and Warranty | | |
| 11 | List catalogues, brochures, technical data, drawings and customer sales records submitted to support the offer | | |
| 12 | List Acceptance Tests to be witnessed by KPLC Engineers at the factory | | |
| 13 | Statement of compliance to specification | | |

.....

**Manufacturer's Name, Signature, Stamp and Date**

***Note:*** *This schedule does not in any way substitute for detailed information required elsewhere in the specification.*

| Issued by: Head of Section, Tech Stds & Specs | Authorized by: Head of Department, R&D |
|---|---|
| Signed: | Signed: |
| Date: 2008-07-03 | Date: 2008-07-03 |