TABLE OF CONTENTS

0.1 Circulation List

0.2 Amendment Record

FOREWORD

1. **SCOPE**
2. **REFERENCES**
3. **TERMS AND DEFINITIONS**
4. **REQUIREMENTS**
5. **TESTS AND INSPECTION**
6. **MARKING, INSTRUCTIONS AND PACKING**

ANNEX A: **Guaranteed Technical Particulars** *(to be filled and signed by the Supplier and submitted together with copies of the manufacturer's catalogues, brochures, technical data, customer sales records & reference letters and test reports for tender evaluation)*

ANNEX B : TYPICAL SECTION PICTURE OF A ROPE HOIST (TIFOR)

0.1 Circulation List

COPY NO.	COPY HOLDER
1	Research & Development Manager
2	Procurement Manager
3	Stores & Stock Control Manager
4	Transmission Manager
5	Deputy Manager, Technical Audit

0.2 Amendment Record

Rev No.	Date (YYYY-MM-DD)	Description of Change	Prepared by (Name & Signature)	Approved by (Name & Signature)

FOREWORD

This specification has been prepared by the Research and Development Department in collaboration with Transmission Department both of Kenya Power and Lighting Company Limited (KPLC) and it lays down requirements for 5 Tons Rope Hoist (TIRFOR). It is intended for use by KPLC in purchasing the Rope Hoist.

The supplier shall submit information which confirms satisfactory service experience with products which fall within the scope of this specification.

1. SCOPE

1.1 This specification is for a hand operated 5 tons rope hoist (tirfor) for tensioning conductors and steel guys used in power lines. It shall be supplied with a 20m wire rope with steel hook and operation handle.

1.2 The rope hoist (tirfor) shall be rugged and robust.

2. REFERENCES

The following standards contain provisions which, through reference in this text constitute provisions of this specification. Unless otherwise stated, the latest editions (including amendments) apply.

ISO 2766- Single Lifting Hooks with Shanks-capacity up to 25tonnes-Grades M,P,S, (T,V)- Hummer & Dropped Forged Hooks.

BS EN 3243-Specification for Hand- Operated Chain Blocks.

BS EN 1677-5 - Components for Slings.Safety. Forged Steel lifting Hooks with Latch.

3. TERMS AND DEFINITIONS

The definitions given in the reference standards shall apply.

4. REQUIREMENTS

4.1 Design and Construction

4.1.1 The equipment shall be used for hoisting, pulling, tensioning and securing loads of

up to 5 tons.

4.1.2 The jacket of the hoist and the jaw block shall be made of hot deep galvanized steel (heavy galvanizing).

4.1.3 The carrying block both at the hoist and at the rope shall be provided with a safety latch against sliding off.

4.1.4 The working elements shall be of enclosed construction type capable of protecting the working elements from dirt and adverse weather (the equipment shall be weather proof).

4.1.5 The hoist shall be capable of withstanding rough handling. It shall not lose any of its properties or functionality due to transportation over rough terrains.

4.1.6 The hoist shall have facility for choosing the speed of hoisting as indicated in the technical specifications.

4.1.7 A load limiter for protection against excessive overload shall be provided.

4.1.8 The safety hooks shall be made of alloy steel to BS EN 1677-5.

4.2 Service condition and operation.

4.2.1 The tools and equipment shall be suitable for continuous use outdoors in tropical areas at altitudes of up to 2200m above sea level, humidity of up to 90%, average ambient temperature of +30°C with a minimum of -1°C and a maximum of +55°C and heavy saline conditions along the coast.

4.2.2 The materials used/level of surface protection shall be suitable for the above service conditions.

4.3 Technical Specifications.

4.3.1 5 tons rope hoist (tirfor)

Item No.		Technical Description	Kplc Technical Requirements
1		Body and handle material	Galvanized steel
2		Body finish	Corrosion resistance
3		Safe working load	5 tons
4		Minimum length wire rope	20m
5		Rope diameter	>16mm
6		Wire type	Multi strand braided
7		Maximum effort on lever to lift load at 0.45 m/min speed of lifting	40 kg
8		Maximum effort on lever to lift load at 0.85 m/min speed of lifting	76 kg
9		Hook	
	i)	material	Forged steel
	ii)	movement	360^0 swivel
	iii)	Safety	Spring loaded gates
10		Safety features	Load limiter
11		Max handle pull effort	<80 daN
12		Maximum length of operating lever	1400mm
13		Weight	>30 kgs
14		Environmental	
		a)Relative Humidity	Up to 90%
		b)operating temperature	-1^0 to 55^0 Celsius
		c)Altitude	Upto 2200m above sea level
15		Warranty on Equipment	At least 12 months
16		Safety factor	5:1

17	Applicable standards	BS 1677-5 & ISO Standards
18	Calibration certificate and Test certificate/ Test Reports	Required
19	Operation and maintenance manual	Two copies and shall be in English language
20	Tandem clamping system	Wear resistance alloy-steel

5.0 TESTS AND INSPECTION

5.1. The rope Hoist shall be inspected in accordance with the requirements of this specification, BS 1677-5 and relevant ISO Standards. It shall be the responsibility of the manufacturer to test or to have performed all the relevant tests.

5.2 Copies of previous test reports by an ISO/IEC 17025 accredited laboratory shall be submitted with the tender for evaluation.

5.3 Test reports for the rope hoists manufactured for KPLC shall be submitted to KPLC for approval before shipment/delivery.

6. MARKING, INSTRUCTIONS, AND PACKING

6.1 The following information shall be marked indelibly and legibly on the rope hoist (tirfor)

i) Manufacturer's Name or Trademark;
ii) Type reference
iii) Safe working load
iv) Serial number
v) Production batch and year of manufacture
vi) Letters "PROPERTY OF KPLC"

6.2 Instructions for use shall be submitted with the rope hoists during delivery (all in English Language.

6.3 The rope hoists shall be complete with case and shall be packed in wooden crates for protection from damage during transportation and storage.

ANNEX A: Guaranteed Technical Particulars *(to be filled and signed by the Supplier and submitted together with copies of manufacturer's catalogues, brochures, drawings, technical data, sales records and copies of certificates/test reports for tender evaluation)*

Tender No. .....

Clause number	**Bidder's offer** (indicate full details of the offered equipment for each requirement of the specification)
1. Scope	
1.1-1.2	
4. Requirements	
4.1 Design & Constuction	
4.1.1- 4.1.8	
4.2 Service Conditions	
4.2.1-4.2.2	
4.3 Technical Specifications	
Requirements 1-20	
Test & Inspection	
5.1-5.3	
Marking & Instruction	
6.1-6.3	

.....

Supplier's Name, Signature, Stamp and Date
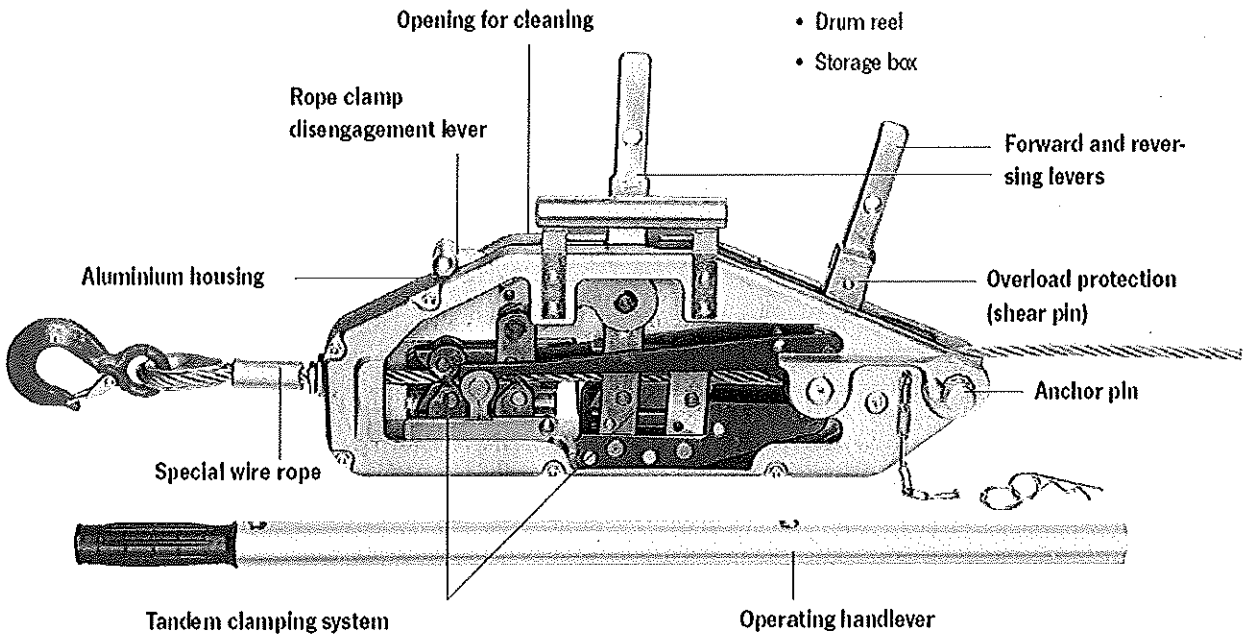
ANNEX B:
TYPICAL SECTION PICTURE OF A ROPE HOIST (TIFOR)